ITEM NO:	REMARK
CPV0015	

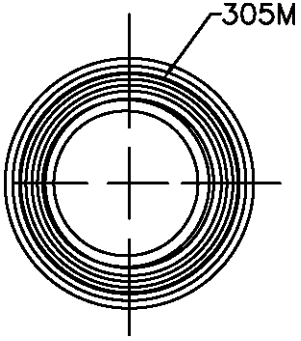

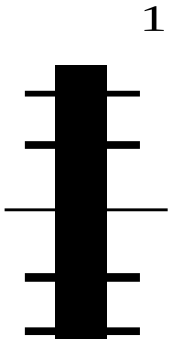

RoHS Compliant !

1--35---i

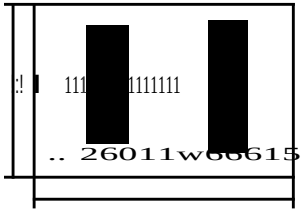

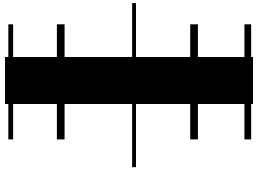

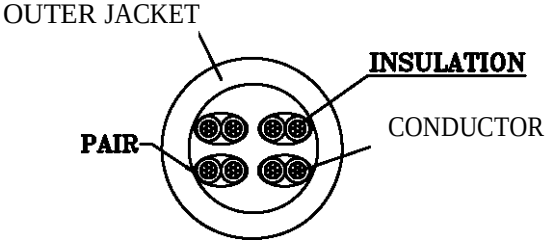

lfiRE SECTION

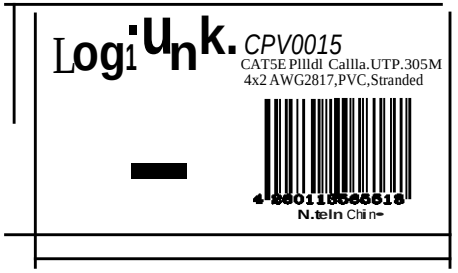

NOTES:

1) CABLE LENGTH:305M
2) EASY PULL WHITE BOX
3) 1PC 50*90MM sticker on both sides of white box
4) 1PC 40*60MM EAN code on shipping mark of outer carton
5) ROHS sticker on side of EAN CODE label
6) Cable with ROHS Compliant

CABLE:

1) CAT.5E UTP 26f4P(7•0.16)CCA, STRANDED TYPE OD:5.5D
   LIGHT GRAY(3014) 3051l/ROIL (RoBS)
   CABLE PRINTER:UTP CAT.5e NETWORKING PATCH CABLE AYG 26/7••p

REV	DESCRIPTION	DR	DATE
A	FIRST EDITION		

2DIRECT GMBH

TITLE	P/N	CPV0015
UTP CABLE (ROHS)	DR	30/09/07

Drawing no. 0254

UNIT:MM

CHKD: | APPD: | CONF:

SIZE:A4